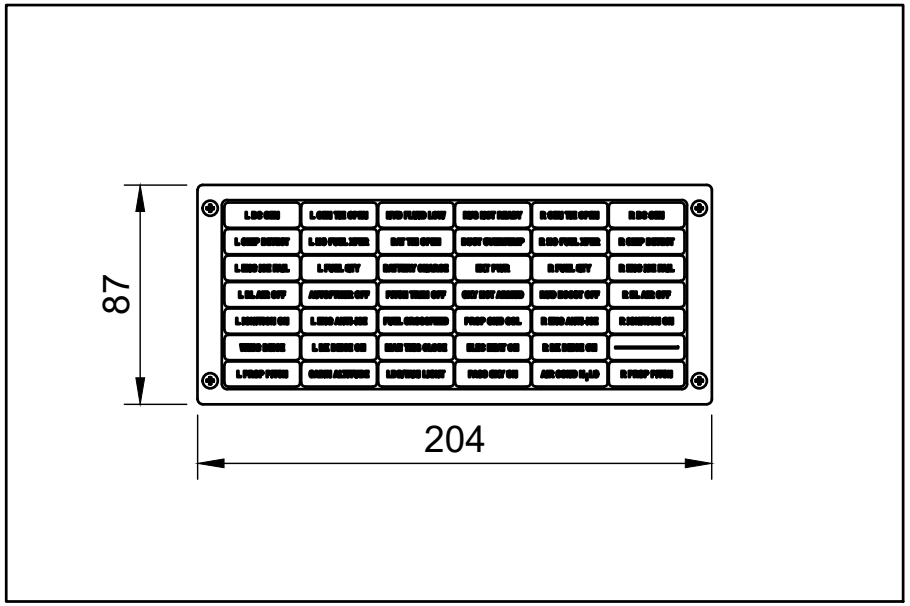

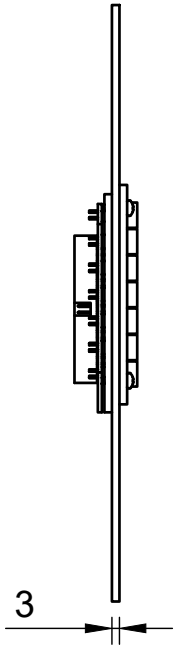

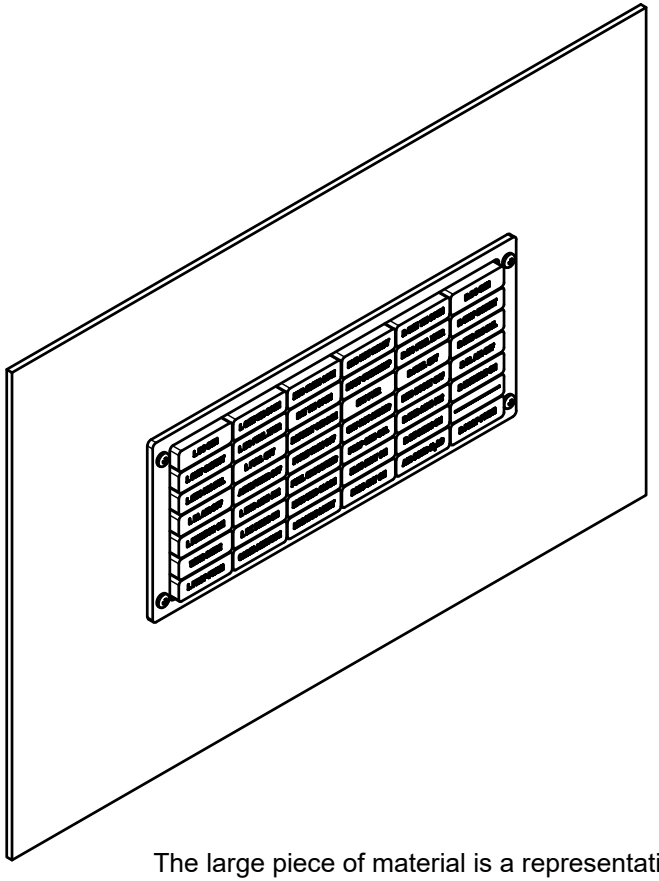

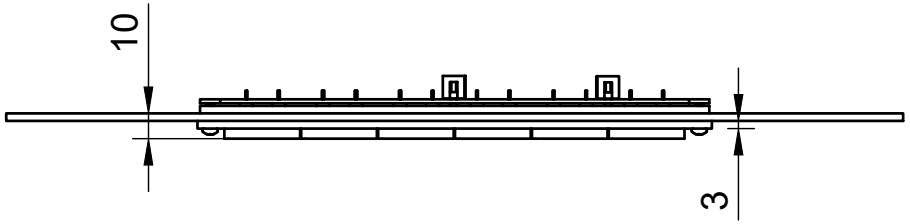

The large piece of material is a representation of a 3mm MIP to show how the Annunciator Panel is mounted. It is not supplied.

Dept.	Technical reference	Created by Ruscool Electronics 25/02/2025	Approved by	
Please note that all dimensions are shown in millimetres RUSCOOL ELECTRONICS LIMITED		Document type	Document status	
		Title B350 MIP Annunciator Panel v7.21 - VAR.D	DWG No.	
			Rev. / Date of issue	Sheet 1/1